9 COUNTY	STATE	PROJECT NUMBER	FISCAL YEAR	SHEET NO.	TOTAL SHEETS
SEDGWICK	KANSAS	#######	####	####	####

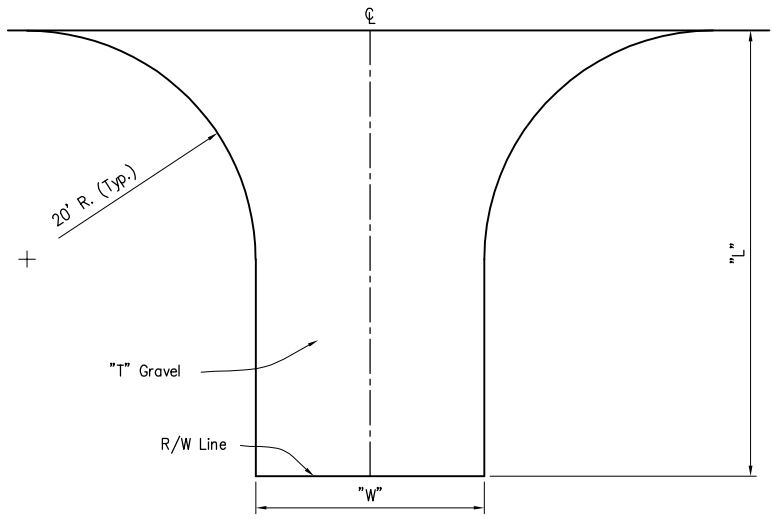

PLAN (TYPE IV)

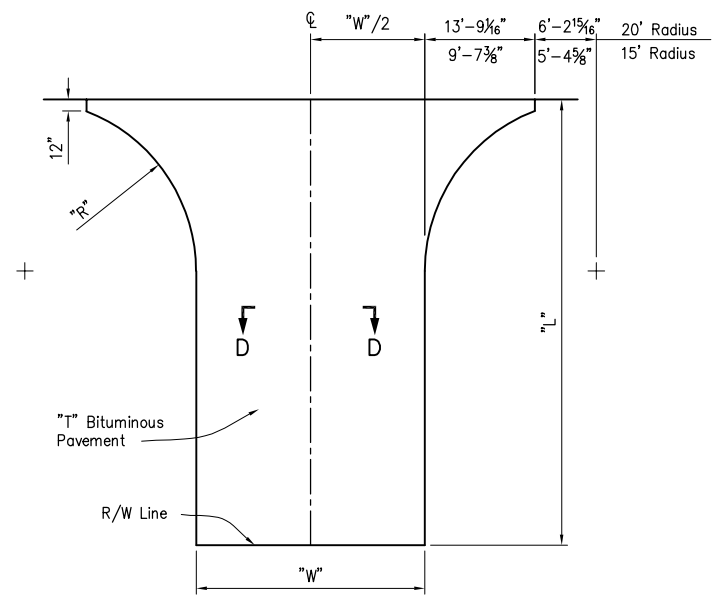

PLAN (TYPE III)

Locations

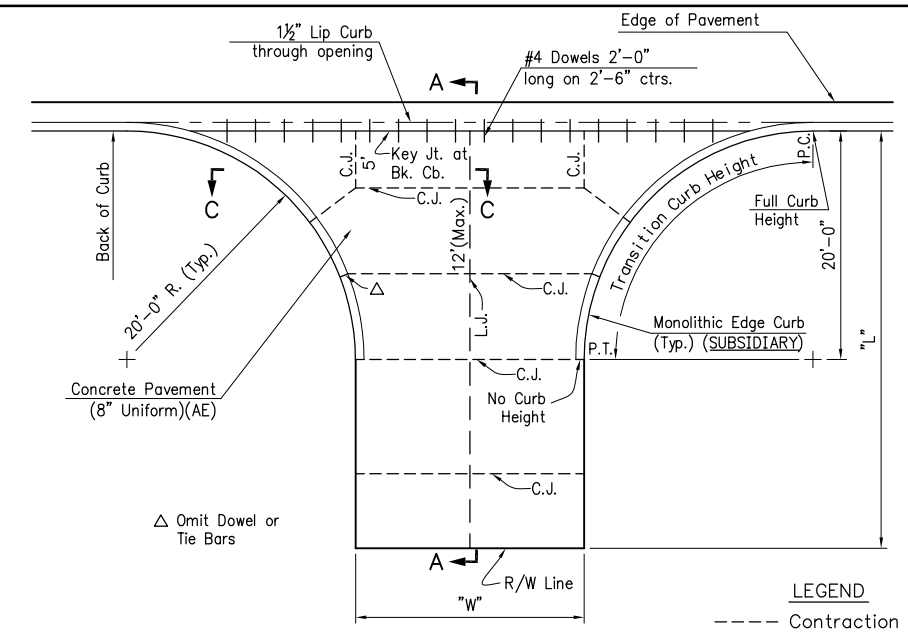

PLAN (TYPE II)

Locations

LEGEND

---- Contraction Joint (C.J.)

— — Longitudinal Joint (L.J.)

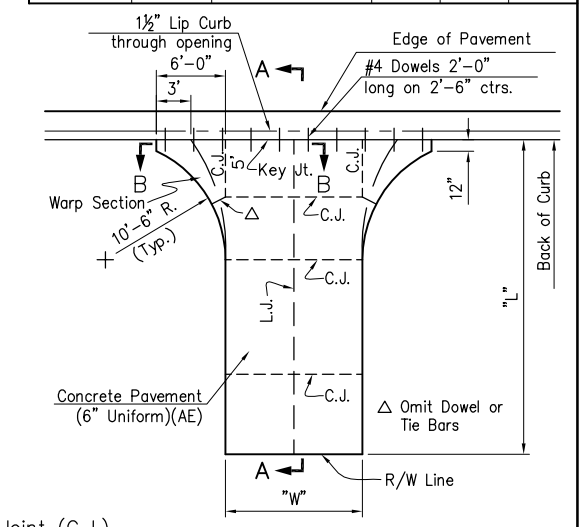

PLAN (TYPE I)

Locations

NOTE: See "Summary of Quantities" sheet No. XX for entrance drive dimensions and quantities.

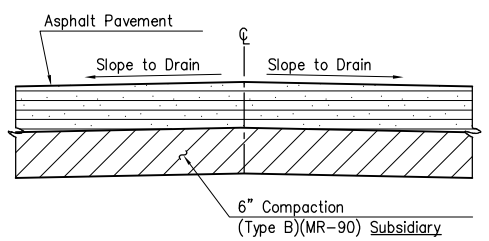

SECTION D–D

NOTE: On entrances which slope toward the highway, a low point shall be constructed in line with the highway ditch to divert surface drainage, unless otherwise shown on the plans.

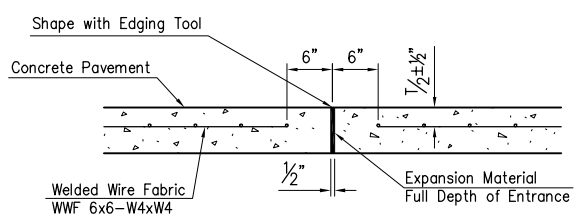

EXPANSION JOINT (E.J.)

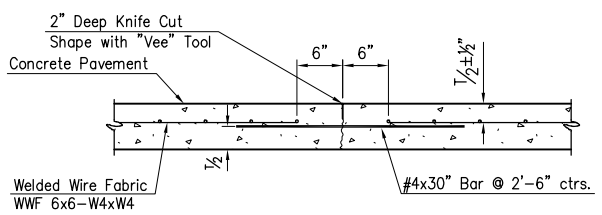

CONTRACTION JOINT (C.J.) or LONGITUDINAL JOINT (L.J.)

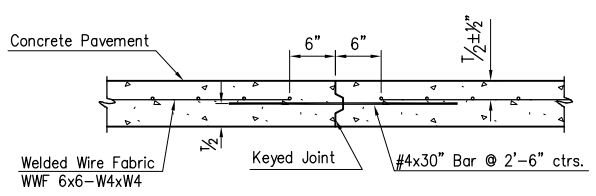

ALT. LONGITUDINAL CONSTRUCTION JOINT

Notes for Concrete Entrances:

Grade 3.0 Concrete (AE) shall be used for Concrete Entrances. On concrete pavement projects, the Contractor may substitute the mix used in concrete pavement.

One longitudinal joint shall be constructed along the centerline of entrances having a "W" of 24' or less. Longitudinal joints shall be constructed at equal spacing not to exceed 10' for entrances having a "W" greater than 24'. The placement of these joints should aid in guiding vehicles entering and leaving the entrance.

Expansion and construction joints shall be constructed at equal spacing not to exceed 12'. Expansion joints shall be 5" of premoulded Expansion Joint Filler (Nonextruding, Type B) and 1" of Hot or Cold poured Joint Sealing Compound.

One–half inch expansion joints shall be installed wherever drive construction abuts sidewalk or bike path. One–half inch expansion joints shall also be installed along the property line and/or back of walk line when drive construction along this line abuts concrete parking lots or concrete drive extension.

Dowel bars shall be omitted from the keyed construction joint along the back of curb when driveways are constructed in conjunction with new concrete pavement construction.

All entrances shall be a minimum of 6" in thickness and shall be reinforced with WWF 6x6–W4xW4.

Welded wire reinforcement and/or tie bars shall be placed using chairs to assure correct vertical placement.

NOTE: All entrance side slopes shall be 6:1 or flatter. The Contractor shall backfill around the edges of all pavements with suitable soil material as directed by the Engineer.

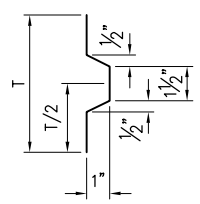

KEY WAY DETAIL

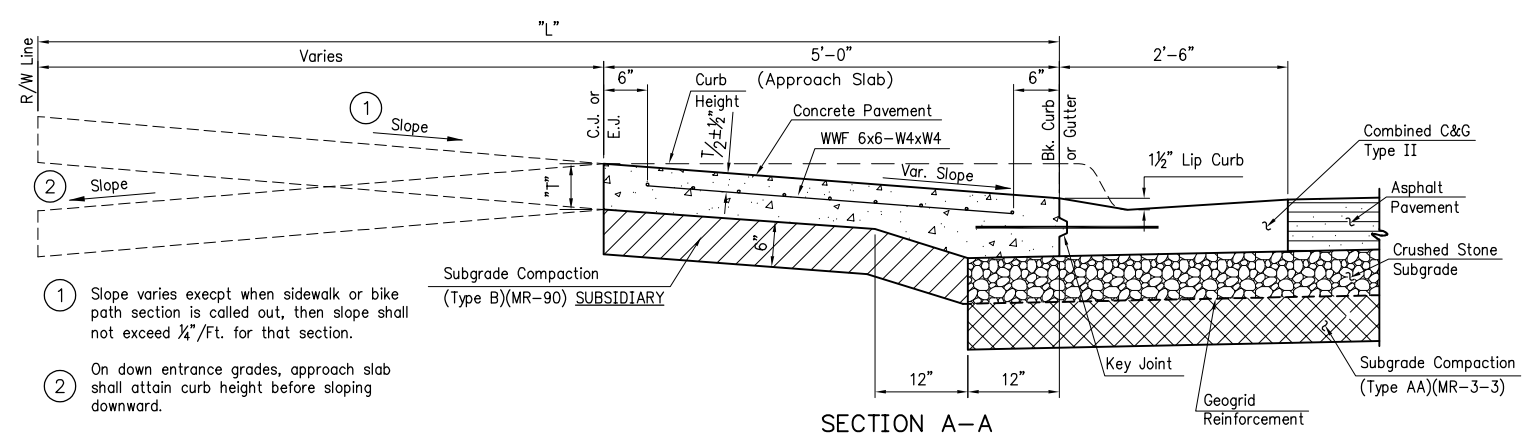

1 Slope varies execpt when sidewalk or bike path section is called out, then slope shall not exceed 1/4"/Ft. for that section.

2 On down entrance grades, approach slab shall attain curb height before sloping downward.

SECTION A–A

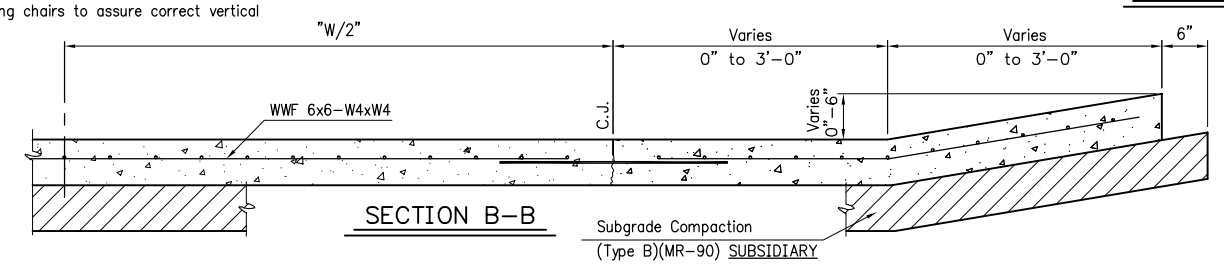

SECTION B–B

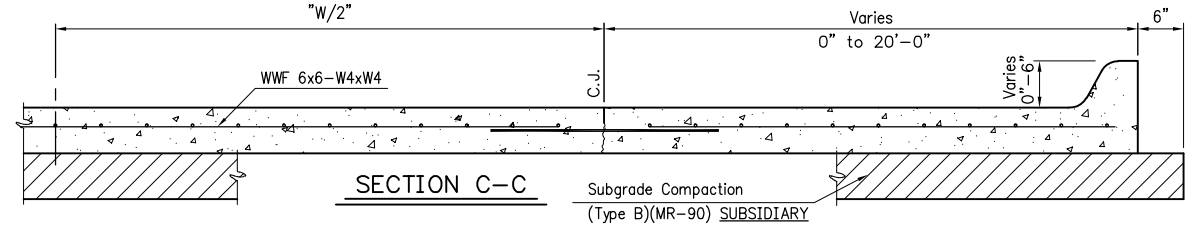

SECTION C–C

ENTRANCE DETAILS

PREPARED BY
SEDGWICK COUNTY PUBLIC WORKS
HIGHWAY DEPARTMENT

LYNN T. PACKER, P.E. — DIRECTOR/COUNTY ENGINEER

SCALE	DESIGNED	DRAWN	CHECKED	SHEET NO.
NONE	L.T.P.	D.R.S.	L.T.P.	####
DATE	8/2006	9/2009	9/2009	

DWG: Entrance Details

Device: Microsoft Print To PDF Page Setup: ---- By: Rhein, Jessica J.
Q:\Blocks\STANDARDS\Entrance Details.dwg Layout: Entrance Details Plotted: 3/29/2023 2:32 PM