COUNTY	STATE	PROJECT NUMBER	FISCAL YEAR	SHEET NO.	TOTAL SHEETS
SEDGWICK	KANSAS	####	####	####	####

TRAFFIC CONTROL NOTES

1. All traffic control devices and installation or use thereof shall comply with the Manual on Uniform Traffic Control Devices for Streets and Highways (Latest Edition), and all traffic control devices shall be NCHRP 350 complaint with respect to crashworthiness requirements.
2. When no work is in progress nor is any expected to be for an extended period of time, or there are no existing hazards, and the roadway is unrestricted to the traveling public, traffic control signs shall be removed or completely covered with adequate opaque waterproof material.
3. All signs shall be post mounted if time in place exceeds three (3) days. Exceptions may be made particularly in urban areas where post–mounted signs are prohibitive. Posts shall be 4" X 4" wood or other breakaway supports that are NCHRP 350 compliant. Signs with a minimum area of 16 square feet shall be mounted on two posts.
4. Portable supports used for mounting signs or devices for temporary conditions shall be NCHRP 350 compliant.
5. All permanent speed limit signs that conflict with the posted project speed limit shall be removed and stored, or covered with adequate opaque waterproof material throughout the construction period.
6. Whenever practical, all construction equipment, materials, and debris shall be stored no closer than thirty (30) feet from the traveled way. The contractor shall place appropriate signs or barricades, as directed by the Engineer, around any condition created by the contractor with thirty (30) feet of the traveled way that violates clear zone criteria stated herein. All devices needed to meet this requirement shall be considered subsidiary to the bid item "Traffic Control".
7. Type "B" high intensity yellow flashing warning lights may be required on any sign or device when deemed necessary by the Engineer.
8. The contractor is responsible for maintaining all devices in their proper position, cleaning or replacing any damaged or worn out device as directed by the Engineer without undue delay to ensure effective and safe traffic control.
9. The contractor shall designate an employee, and an alternate, who will have the responsibility for signing and traffic control as noted on the traffic control plan and shall be available at all times to perform the above maintenance. The Engineer will be advised of the name and contact numbers/methods of the person and alternate given this responsibility. The Engineer shall conduct daily field inspections to see that the devices are in place and in satisfactory condition.
10. Channelization devices: Devices as used herein shall include, but not be limited to Type I and Type II barricades.
    A. The maximum spacing, in feet, between channelization devices in the taper should be approximately equal to the permanent speed limit, in miles per hour, prior to construction.
    B. The spacing between devices in the work zone should be approximately 50 to 100 feet.
    C. Devices placed along pavement edge or shoulder drop–offs of less than four (4) inches shall be placed a maximum of four hundred (400) feet apart as directed by the Engineer.
    D. Devices placed along pavement edge or shoulder drop–offs of more than four (4) inches shall be placed a maximum of two hundred (200) feet apart as directed by the Engineer.
    E. Type I or Type II barricades should be placed at approximately right angles to the center of the roadway.
    F. All channelizing devices shall be fully reflectorized and, as directed by the Engineer, display the appropriate warning light on top of the device nearest the traveled way centerline.
11. The lump sum price bid for the bid item "Traffic Control" shall be full compensation for providing, installing, moving, replacing, maintaining, removing and cleaning all traffic control devices as required or as directed by the Engineer. It shall also include the addition of any devices deemed necessary by the Engineer whether specifically mentioned or not.
12. At all times, and during all weather conditions, access shall be maintained for local traffic to the satisfaction of the Engineer. This maintenance, including temporary surfacing material, if necessary, is subsidiary to the bid item "Traffic Control".
13. All advance warning signs shall have a minimum surface area of 16 square feet. All other signs shall be of standard size as directed in the MUTCD or the most recent edition of the Standard Highway Signs Manual unless specified otherwise on the traffic control plan.

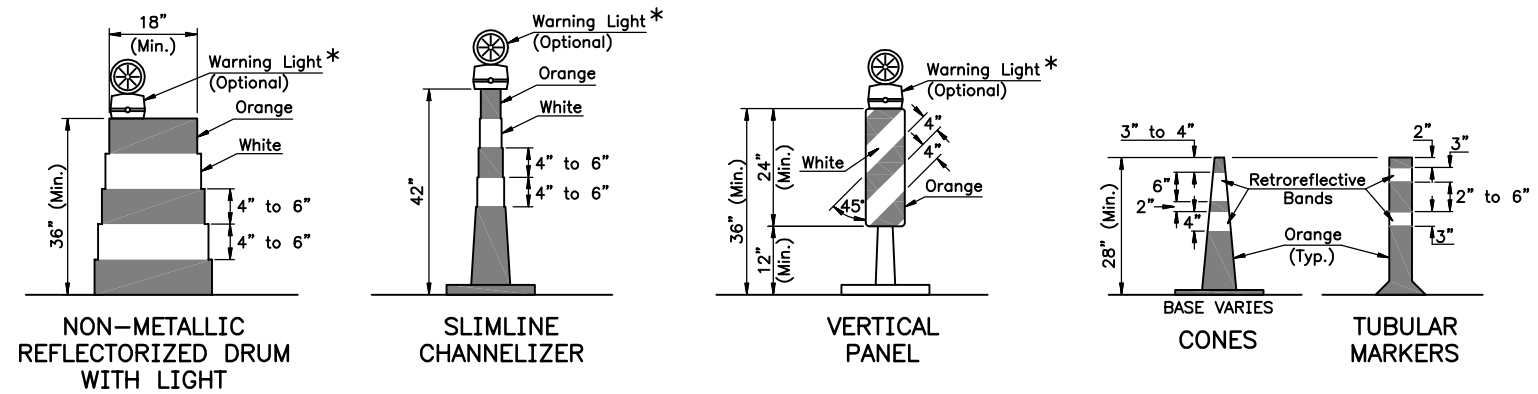

WARNING LIGHTS

Warning lights shall be in accordance with the current ITE purchase specifications for flashing and steady burn warning lights.

Type A low intensity flashing warning lights and Type C steady burn warning lights shall be maintained so as to be capable of being visible on a clear night from a distance of 3,000 feet. Type B high intensity flashing warning lights shall be maintained so as to be capable of being visible on a sunny day when viewed without the sun directly on or behind the device from a distance of 1,000 feet.

* Lights used on Channelizing Devices
When used singly --- Type "A" Flashing
When used in series – Type "C" Steady Burn
The lens shall be a minimum of 7" in diameter.

The non–metallic drums shall be fully reflectorized with Type III or Type IV reflective sheeting per FP–96.

All advance warning signs shall be reflectorized with fluorescent orange prismatic grade reflective sheeting.

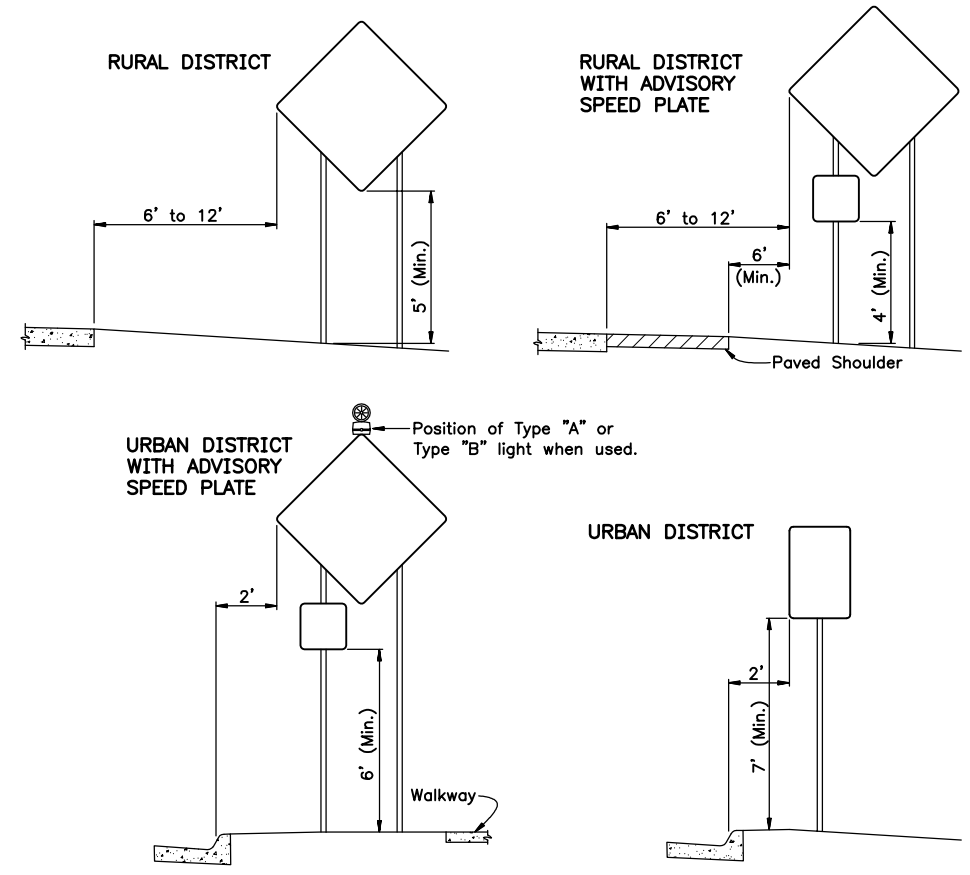

SIGN MOUNTING LOCATIONS

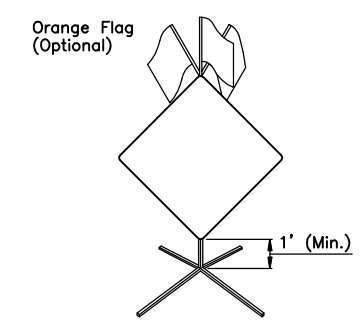

Portable sign supports should not be used for more than three continuous days.

PORTABLE/TEMPORARY SIGN MOUNTING

Rev.Date	Description	By / Chk

TRAFFIC CONTROL DETAILS SIGNS & CHANNELIZATION DEVICES

TC 1–0

PREPARED BY
SEDGWICK COUNTY PUBLIC WORKS
HIGHWAY DEPARTMENT

DAVID C. SPEARS, P.E. — DIRECTOR/COUNTY ENGINEER

REVISED	SCALE	DESIGNED	DRAWN	CHECKED	SHEET NO.
	NONE	M.R.B.	D.R.S.	M.R.B.	####
	DATE	2/2005	4/2005	4/2005	

DWG: TC1–0.dwg

Device: CutePDF Printer.pc3 Page Setup: PDF 11x17 By: Standrich, Daryl
Q:\Blocks\Std\TC1–0.dwg Layout: #### Plotted: 2/27/2006 8:32 AM