Addendum Number Five
To The Drawings and Specifications for
Juvenile Services Building
RFB Bid Number: 26-0021, Sedgwick County, Kansas

Issued: November 19, 2026

HANNEY & ASSOCIATES ARCHITECTS
1726 South Hillside, Wichita, Kansas

NOTICE TO BIDDERS
You are hereby instructed to include in your bids the following changes and/or corrections to the Drawings and Specifications for the **Construction of the New Juvenile Services Building at 881 S. Minnesota, Wichita, Kansas 67211.**

The additions and/or corrections shall be considered as a part of the Contract Documents as if incorporated therein. Where the following corrections and/or additions vary from the conditions of the Drawings and Specifications, such following changes or additions shall govern.

I. GENERAL CLARIFICATIONS:

1.1 The Project Timeline remains with this addendum, as follows.
The Bid Due Date: Tuesday, November 24, 2026, no later than 1:45 p.m.
Bid Opening: Tuesday, November 24, 2026, at 3:00 p.m.

II. CHANGES TO THE SPECIFICATIONS:

2.1 Section 064023 – Interior Architectural Woodwork
This is a revision to the cabinet construction noted in paragraph 14.1. AWI Type of Cabinet construction shall be Full overlay doors on frameless cabinet construction. Where open cabinets occur the solid wood edge remains as detailed, where occurs.
Grade: Custom remains unchanged.

2.2 Section 142400 – Hydraulic Elevator- Passenger
This is a revision to the finished flooring material within the elevator cab. The new finished flooring and the installation with a county seal is by others. The elevator cab shell finishes, other than the finished flooring, will remain as specified and be by the General Contractor.

2.3 Section 26 3213 – Engine Generator
Corrected sound attenuation requirements to be 68 dBA or less at 7 meters.
Removed spring isolator requirement.

2.4 Section 26 32 13: ENGINE GENERATOR.
a. Corrected sound attenuation requirements to be 68 dBA or less at 7 meters.

b. Removed spring isolator requirement.

2.5 Section 27 11 00: COMMUNICATIONS EQUIPMENT ROOM FITTINGS.

a. See attached cabling standards published by Sedgwick County. Please incorporate these requirements into this specification section.

b. For clarification: All backboards, equipment frames, power strips, cable management, grounding, labeling shall be provided and installed by the contractor.

2.6 Section 27 15 00: COMMUNICATIONS HORIZONTAL CABLING.

a. See attached cabling standards published by Sedgwick County. Please incorporate these requirements into this specification section.

b. For clarification: All UTP hardware, connecting blocks, patch panels, patch cords, fiber, voice/data/camera CAT6/6A cabling, terminations, cover plates, labeling shall be provided and installed by the contractor.

III. CHANGES TO THE DRAWINGS:

3.1 Sheet A6.16

Finish Clarification to Detail 10. Omit reference to Faux Foliage Material.

3.2 Sheet A7.2

High Pressure Laminate Legend Clarification

a. PL-1B Fenix 0771 NTM Bloom, Size: 2,464 mm x 1,2455 mm is in stock. The 1 mm thickness is revised to be .7mm thickness.
Contact: Laura Knight, email: laura.knight@formica.com

b. PL-3 Chemetal 750, Aluminum on Laminate Backer. One (1) 4' x 8' sheet is in stock with additional sheets available mid-January. Distributor: Compi Distributors, phone: 636-296-1111.

3.3 Sheet A7.3

a. This is a revision to Detail 3 and Detail 4; changes noted here are applicable to rooms R101 and B130 only: The Cantilevered Sink apron shall run continuously as detailed in Detail 4, with a fixed solid surface panel. The shroud in Detail 3 is noted to receive finish PL-3. Omit fixed wall panel below shroud. Extent of Tiled wall finish shall extend to a height that is viewable, where occurring at wall space below shroud.

b. Remaining plastic laminate finish for cabinetry in Serving Kitchens: R101 and B130 shall be PL-1B. Countertop finishes remain unchanged.

c. The stainless-steel custom cabinet and equipment stands remain unchanged within Serving Kitchens: R101 and B130.

3.4 Sheet A7.6

This is a clarification to Detail 3, Serving Counter – open cabinet: The bottom panel to the drawer base supports the KDA/KDHE separation of storage for food safety. Construction of the drawer base cabinet with the open space below shall support food safety storage.
The cabinetry shown within Serving Kitchens R101 and B130 meet food safety storage requirements as detailed.

3.5 Sheet A7.8
Wall Cap Detail 2/A7.8 is added by this addendum. This detail is found on sheet with General Installation Details; see sheet A8.11, Detail 16. Where Detail 2/A7.8 is referenced on elevations within the complete set of documents, modify detail 16/A8.11 as follows:
Finish material: ES-3. Exposed edge to be material thickness: .08 inch, eased. Width of Cap edges shall extend and be flush with exposed surface finish on both sides of the wall and/or splash.

3.6 Sheet A7.8
Wall Cap Detail 15/A7.8 is added by this addendum. This detail is found on sheet with General Installation Details, see Sheet A8.11, Detail 16. Where Detail 2/A7.8 is referenced on elevations within the complete set of documents, modify detail 16/A8.11 as follows:
Finish material: ES-2. Exposed edge to be material thickness: 1/2 inch, eased. Width of Cap edges shall extend and be flush with exposed surface finish on both sides of the wall. Provide J-bead at edge of drywall prior to setting wall cap, run continuously.

3.7 Sheet A8.1
Room Finish Matrix Revision to include windowsills in each Dorm room.
Dorm rooms shall have porcelain tile windowsills. See Detail 13/A8.11.
Material: WT-3. Long length of tile to run parallel with width of window opening.

3.8 Sheet A2.14 – Detail Call Outs
Two details are keyed as Detail 14. Where a ceiling cloud is indicated, refer to Detail 14, *Second Floor Work Room Cloud*, for construction of similar assemblies.
Use the dimensions shown on the cloud detail plans for each location.
Where an access panel is indicated, refer to Detail 14, *Access Door.*

3.9 Sheet E1.1: Light Fixture Schedule.

a. Fixture type M1 has changed part number to: Lithonia WDGE3 LED P3 40K 80CRI T3M MVOLT DDBXD

b. Fixture type W and W2 have changed part numbers to: Lithonia DSC0 LED P6 40K T3M MVOLT RPA DDBXD. Pole height shall be 20’ round tapered steel.

3.10 Sheet E1.1: General Notes.
General note #6 shall read: ROUTE 3/4" EMT (W/PULL ROPE) FROM EACH TELEPHONE OUTLET, COMPUTER NETWORK CABLE OUTLET, COMBINATION TELE/COMP. OUTLET AND CABLE T.V. OUTLET TO NEAREST ACCESSIBLE CEILING CAVITY. PROVIDE 4-SQUARE BOX WITH PLASTER/EXTENSION RING (AS REQUIRED). TERMINATE EACH EMPTY CONDUIT PARALLEL WITH CEILING AND PROVIDE WITH INSULATED BUSHING. ALL COVERPLATES, CABLES, WIRING, TERMINATIONS, JACKS, LABELING, TESTING SHALL BE PROVIDED BY **CONTRACTOR**.

3.11 Sheet E1.4: Riser Diagram.
The feeder for Panel EL2 was not originally indicated. Please provide & install 4#3 & 1#8g. in 1 ¼”c.

3.12 Sheet E1.5: Panel Schedules.
Panel ‘P3’ shall be changed to a 2-section, 225A MLO, 84 pole space panelboards.

3.13 Sheet E2.1: See clouded changes on attached drawing.
Updated Power Plans to indicate system furniture connections in all private offices.

3.14 Sheet E2.2: See clouded changes on attached drawing.

a. Updated Power Plans to indicate system furniture connections in all private offices.

b. Multipurpose B127: Each floor box shall receive a dedicated circuit from Panel ‘P2’.

c. Multipurpose B132: Added two dedicated circuits from Panel ‘P2’.

3.15 Sheet E2.4: See clouded changes on attached drawing.
Updated Power Plans to indicate system furniture connections in all private offices.

3.16 Sheet E2.5: See clouded changes on attached drawing.
Updated Power Plans to indicate system furniture connections in all private offices.

3.17 Sheet E4.1: Low Voltage Plan – Area A.

a. Add (1) carbon monoxide detector in mechanical room B137.
b. The smoke detectors in the dorm rooms noted with a ‘1’ are sounder base detectors.

3.18 Sheet ES1.1: Electrical Site Plan
Parking lot lighting circuit shall be 20A-2P breaker in panel ‘EL2’.

END OF ADDENDUM FIVE

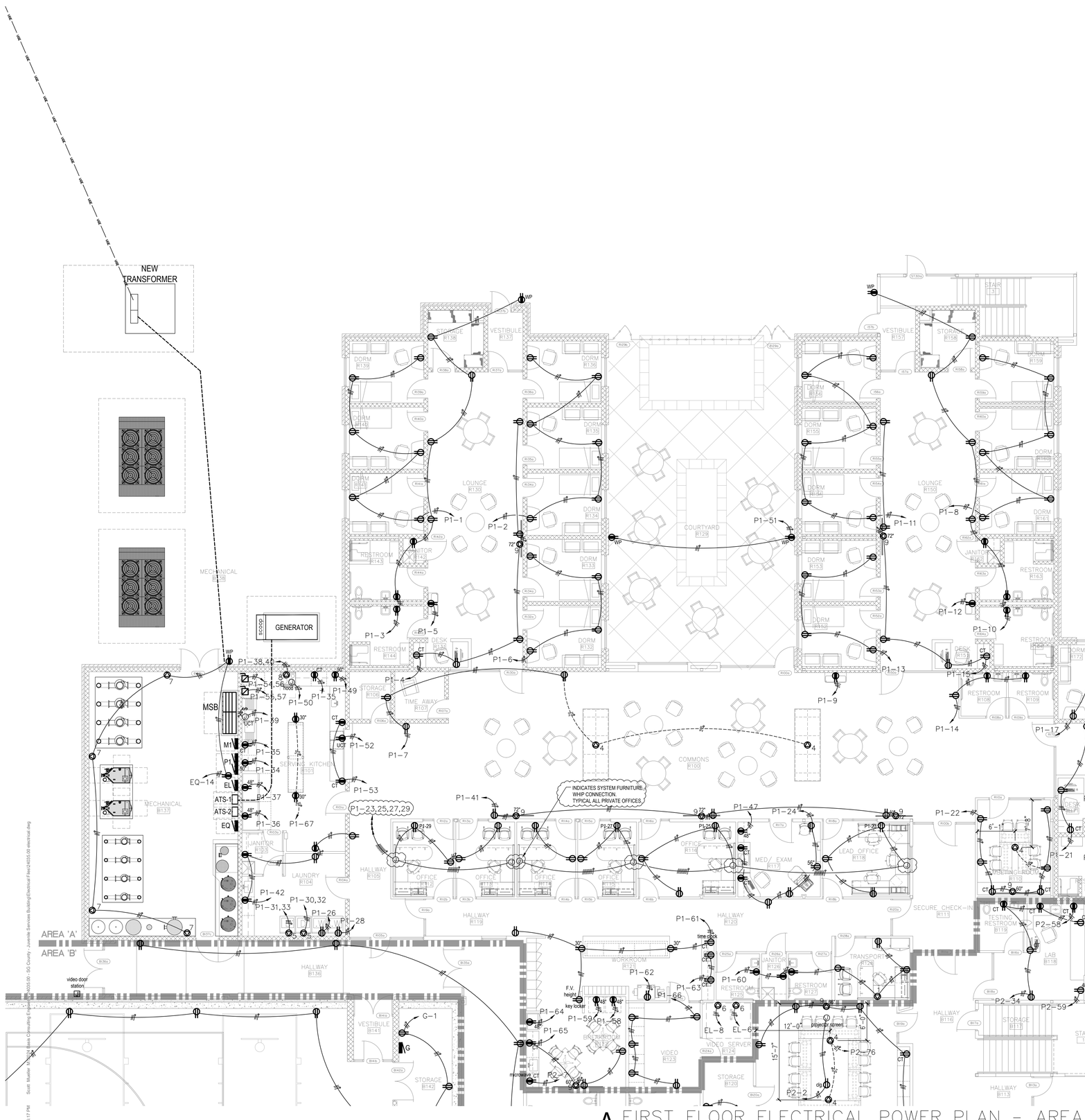

A FIRST FLOOR ELECTRICAL POWER PLAN - AREA "A"

SCALE: 1/8" = 1'-0"

NORTH

FIRST FLOOR KEY PLAN

HAMMEY & ASSOCIATES, ARCHITECTS
1726 South Hillside, Wichita, Kansas, 67211
Phone (316) 683-8965
Fax (316) 684-1441

SCOTT A. MUELLER
LICENSED
PROFESSIONAL ENGINEER
14938
9-17-26
KANSAS

2025 SEDGWICK COUNTY

JUVENILE SERVICES BUILDING

881 MINNESOTA, WICHITA, KANSAS

DRAWINGS ISSUED		
NO.	DATE	ITEM ISSUED
15	11/6/26	ADDENDUM #3
13	9/17/26	BID SET
12	8/17/26	MABCD REVIEW
11	4/3/26	PERMIT

DRAWING FILE

DATE: SEPTEMBER 2026	
DRAWN BY:	CHECKED BY:
MH, SM	SM

SHEET

E2.1

BASIS consulting engineers
800 E 1st St • Suite 401
Wichita, Kansas 67202
basisengineers.com
Telephone 316.941.5533

11/6/2025 3:36:17 PM Scott Mueller M:\2024 Basis Consulting Engineers\2024033.00 - SG County - Juvenile Services Building\Electrical Files\24033.00 electrical.dwg

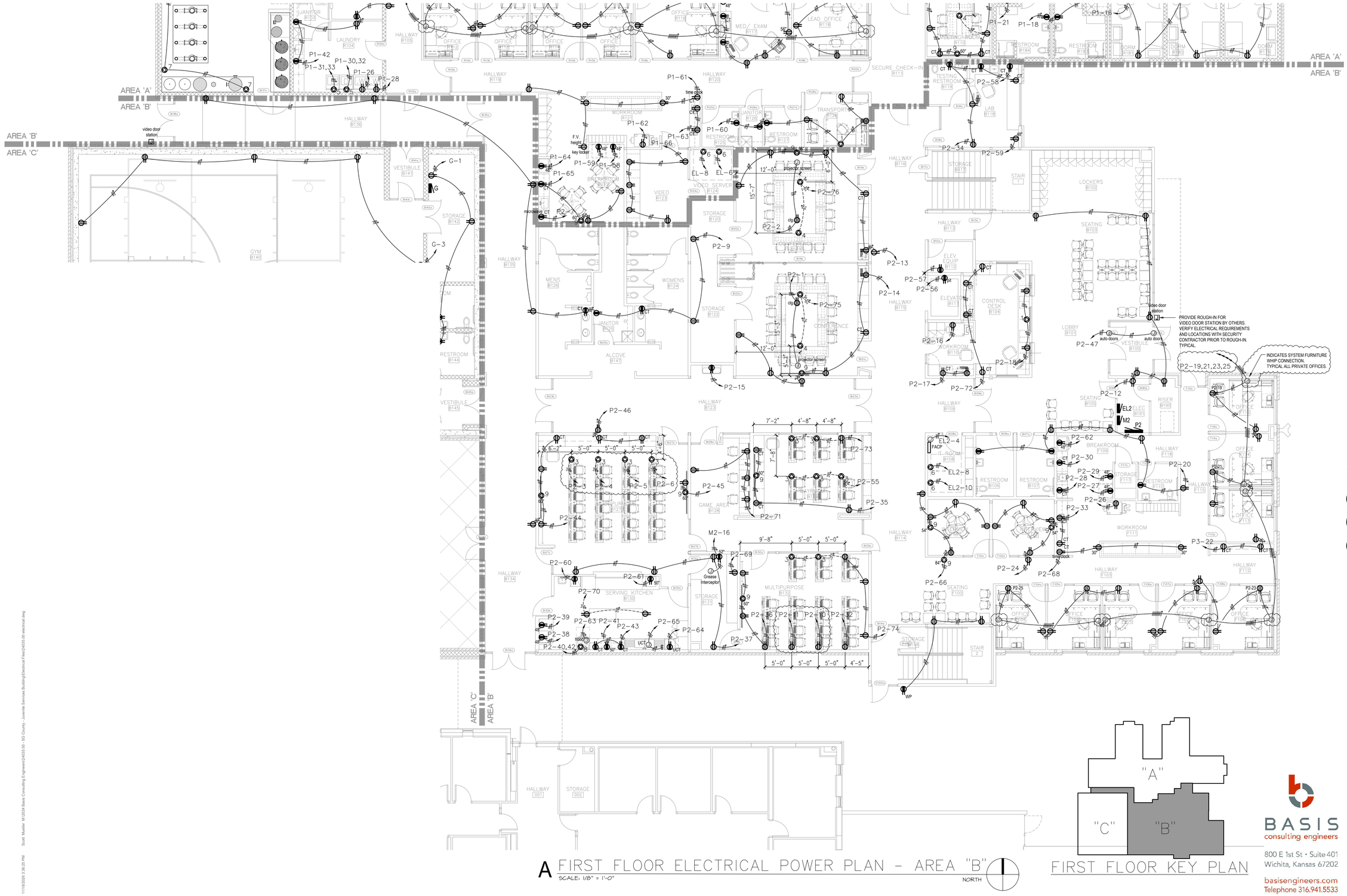

A FIRST FLOOR ELECTRICAL POWER PLAN - AREA "B"

SCALE: 1/8" = 1'-0"

FIRST FLOOR KEY PLAN

ARCHITECTS

SCOTT A. MUELLER LICENSED 14938 9-17-26 KANSAS PROFESSIONAL ENGINEER

HAMMEY & ASSOCIATES, ARCHITECTS
1726 South Hillside, Wichita, Kansas, 67211
Phone (316) 683-8965
Fax (316) 684-1441

2025 SEDGWICK COUNTY

JUVENILE SERVICES BUILDING

881 MINNESOTA, WICHITA, KANSAS

DRAWINGS ISSUED		
NO.	DATE	ITEM ISSUED
15	11/6/26	ADDENDUM #3
13	9/17/26	BID SET
12	8/17/26	MABCD REVIEW
11	4/3/26	PERMIT

DRAWING FILE

DATE: SEPTEMBER 2026

DRAWN BY:	CHECKED BY:
MH, SM	SM

SHEET

E2.2

BASIS consulting engineers
800 E 1st St • Suite 401
Wichita, Kansas 67202
basisengineers.com
Telephone 316.941.5533

11/6/2025 3:36:25 PM Scott Mueller M:\2024 Basis Consulting Engineers\24055.00 - SG County - Juvenile Services Building\Electrical Files\24055.00 electrical.dwg



A SECOND FLOOR ELECTRICAL POWER PLAN - AREA "D"

SCALE: 1/8" = 1'-0"

NORTH

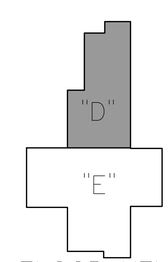

SECOND FLOOR KEY PLAN

ARCHITECTS

SCOTT A. MUELLER
LICENSED
9-17-26
14938
KANSAS
PROFESSIONAL ENGINEER

HAMMEY & ASSOCIATES, ARCHITECTS
1726 South Hillside, Wichita, Kansas, 67211
Phone (316) 683-8965
Fax (316) 684-1441

2025 SEDGWICK COUNTY

JUVENILE SERVICES BUILDING

881 MINNESOTA, WICHITA, KANSAS

DRAWINGS ISSUED		
NO.	DATE	ITEM ISSUED
15	11/6/26	ADDENDUM #3
13	9/17/26	BID SET
12	8/17/26	MABCD REVIEW
11	4/3/26	PERMIT

DRAWING FILE

DATE: SEPTEMBER 2026	
DRAWN BY:	CHECKED BY:
MH, SM	SM

SHEET

E2.4

BASIS consulting engineers
800 E 1st St • Suite 401
Wichita, Kansas 67202
basisengineers.com
Telephone 316.941.5533

11/19/2026 3:36:32 PM Scott Mueller M:\2024 Basis Consulting Engineers\24035.00 - SG County - Juvenile Services Building\Electrical Files\24035.00 electrical.dwg

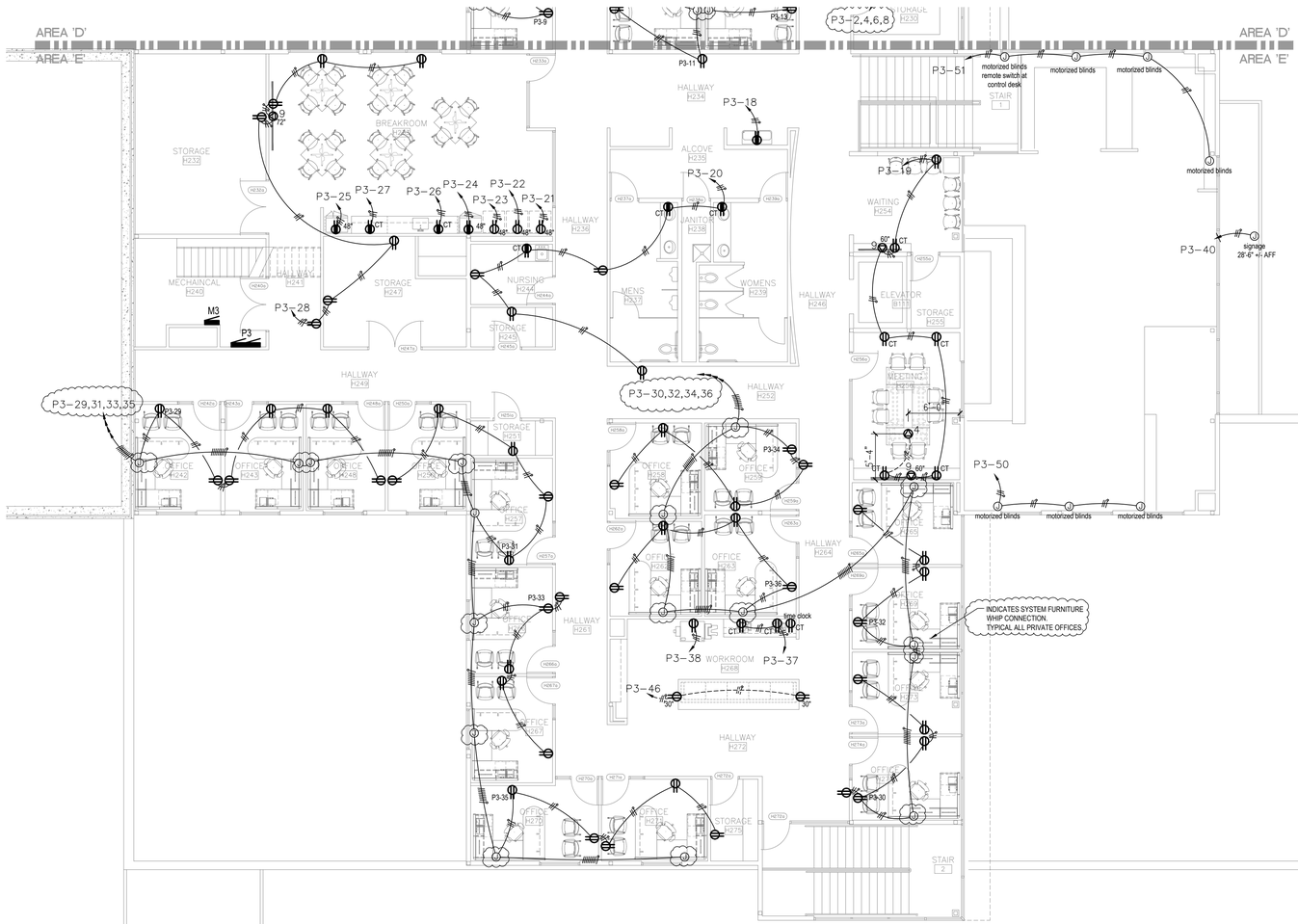

A SECOND FLOOR ELECTRICAL POWER PLAN - AREA "E"
SCALE: 1/8" = 1'-0"

NORTH

SECOND FLOOR KEY PLAN

ARCHITECTS

SCOTT A. MUELLER
LICENSED
PROFESSIONAL ENGINEER
14938
9-17-26
KANSAS

HAMMEY & ASSOCIATES, ARCHITECTS
1726 South Hillside, Wichita, Kansas, 67211
Phone (316) 683-8965
Fax (316) 684-1441

2025 SEDGWICK COUNTY

JUVENILE SERVICES BUILDING
881 MINNESOTA, WICHITA, KANSAS

DRAWINGS ISSUED		
NO.	DATE	ITEM ISSUED
15	11/6/26	ADDENDUM #3
13	9/17/26	BID SET
12	8/17/26	MABCD REVIEW
11	4/3/26	PERMIT

DRAWING FILE

DATE: SEPTEMBER 2026	
DRAWN BY:	CHECKED BY:
MH, SM	SM

SHEET

E2.5

BASIS
consulting engineers
800 E 1st St • Suite 401
Wichita, Kansas 67202
basisengineers.com
Telephone 316.941.5533

11/18/2026 3:39:49 PM Scott Mueller M:\2024 Basis Consulting Engineers\24035.00 - SG County - Juvenile Services Building\Electrical\ Files\24035.00 electrical.dwg

SEDGWICK COUNTY

Product and Installation Specifications

for

Building Data Communication Cabling

April 2026

1. OVERVIEW

This document is the specification for the installation of Structured Cabling Systems at Sedgwick County. The data part is suitable for the provision of high speed Ethernet communications for individual buildings. The principle use of this practice is for the construction of new building, major renovations, or additions to cable plant.

1.1 General Scope

The practice basically follows the relevant EIA, TIA, CSA standards and architectures for commercial buildings. As such, it is focused on the facilities required within a building not the inter-building facilities that are required to ensure a comprehensive County wide network. For specifications of telecommunications rooms see the County document "Communications Infrastructure Specifications, Standards and Practices "and for conduit sizes see the EIA/TIA 569B standard.

The practice aims to ensure a cabling system that will give a predictable, consistent and flexible subsystem with a substantial lifetime for the applications that Sedgwick County needs. It specifies Cat 6 cable for the horizontal UTP copper systems. The formerly specified Cat5e cable has been replaced by Cat6 cable. This practice specifies which OEMs can be used. Recommended OEMs include, but are not limited to, Belden, Commscope, Panduit and Leviton. It will be noted that for telecommunications rooms, there is single vendor approach for the piece parts such as racks, power distribution units and cable management subsystems. This is done for consistency to make it easier for technicians to service and expand the facilities in those rooms.

1.1.1 This document specifies the requirements for the installation of all horizontal UTP cabling and all copper/fiber backbone cabling to support voice and data applications in a new or renovated space. It should be noted that Category 6 cabling is specified in the vertical riser in addition to fiber.

1.1.2 The cabling contractor shall supply and install a complete telecommunications cabling system based on a physical star wiring topology that is designed in accordance with practices recommended by the Building Industry Consulting Service International (BICSI) organization. Furthermore, the cabling contractor shall include all communication outlets, terminating hardware, network racks, patch panels, cable management, patch cables (both fiber and Cat6), and selected connectivity devices as outlined in this specification.

Cabiling Contractor must provide documentation that a Building Industry Consulting Services International (Bicsi) Certified installer 2 is on staff prior to project start date.

1.1.3 It is the responsibility of the cabling contractor to report any errors and/or omissions in this specification with their bids.

1.2 Inquiries Bidders who find discrepancies or omissions in this specification, or who have any doubt as to the meaning or intent of any part of this specification, shall direct their questions or other inquiries by email or facsimile to the System Admin and Telecom Manager of Sedgwick County.

2. PRODUCT AND INSTALLATION STANDARDS

2.1 The equipment, material and installation shall conform to the latest version of the applicable codes, standards and regulations of authorities having jurisdiction.

2.2 All components supplied and/or installed will support current applications and any future application introduced by recognized standards or user forums that use EIA/TIA 568 component and link/channel specifications for cabling.

2.3 The specifications detailed in this document are accompanied by EIA/TIA and/or CSA requirements both for product and installation practices. The following are communications standards documents that must be adhered to:

Standard	Title
ANSI/TIA-568-C.0	Generic Telecommunications Cabling for Customer Premises
ANSI/TIA-568-C.1 Standard	Commercial Building Telecommunications Cabling
ANSI/TIA-568-C.2	Balanced Twisted-Pair Telecommunication Cabling and Components Standard
ANSI//TIA-568-C.3	Optical Fiber Cabling Components Standard
ANSI/EIA/TIA-569-A	Commercial Building Standard for Telecommunications Pathways and Spaces
ANSI/EIA/TIA-606(A)	Administration Standard for the Telecommunications Infrastructure of Commercial Buildings Product and Installation Specifications For Building Data Communication Cabling 5
ANSI/EIA/TIA-607(A)	Commercial Building Grounding and Bonding Requirements for Telecommunications
ANSI/EIA/TIA-598	Color Coding of Fiber Optic Cables

ANSI/EIA/TIA-455	Test Procedures For Fiber Optics, Cables and Transistors
ANSI/EIA/TIA-604-3	FOCIS 3 Fiber Optic Connector Intermatability Standard
ANSI/ICEA S-83-596	Fiber Optic Premises Distribution Cable
ANSI/ICEA S-83-640	Fiber Optic Outside Plant Communications Cable
ANSI/NECA/BICSI-568	Standard for Installing Commercial Building Telecommunications Cabling

3. PRODUCT SPECIFICATIONS

3.1 General Conditions

3.1.1 This document specifies that the horizontal structured cabling system shall be a single manufacturer end-to-end solution. Recommended manufacturers include, but are not limited to, Panduit TX 6000TM System, Belden IBDN 2400 System, Commscope Gigaspeed XL, and Leviton. See appendices for examples of vendor product list and part numbers. It is recommended to consult vendors on current product offerings.

3.1.2 The Cat 6 end-to-end system solution shall meet or exceed 250MHz in the channel. Third party test results shall be required such as ETL test results. In house manufacturer test results are not acceptable.

3.1.3 Products installed must meet or exceed all local, provincial and federal building, fire, health, safety and electrical codes.

3.1.4 The cabling contractor is responsible for complete storage, handling, delivery, and installation of all materials used in the performance of the work.

3.1.5 The cabling contractor is responsible for keeping the workplace clean, safe and free from debris at all times. All debris must be removed from the site on a daily basis. The costs for cleaning are the responsibility of the cabling contractor.

3.2 Cabling Support Structure

3.2.1 The cabling contractor is to supply and install cable support system and any other miscellaneous hardware required for supporting all horizontal cabling where conduit or cable tray has not been provided. All horizontal cabling must be supported at 48” to 60” intervals.

3.3.2 Red Iron and or building infrastructure is not an acceptable cabling support system. Examples of an acceptable support system are but not limited to J-Hooks, Basket Tray, Bridal Rings, Etc.

3.2.3 Where required by local codes all cabling shall be installed in metallic EMT conduit.

3.3 Communications Cabling Category 6 Horizontal Data Cable

3.3.1 The horizontal data cabling shall be solid copper, blue unshielded twisted pair (UTP), 4- pair, 23 AWG, CMP rated (FT6) or CMR rated (FT4), Category 6 cable as applicable. Acceptable examples of cables are Panduit TX 6000TM System, Belden IBDN 2400 System, Commscope Gigaspeed XL, or Leviton.

3.3.2 The cable shall be tested and characterized to 350 MHz and have a positive PSACR above 250 MHz. It shall also be UL listed.

3.3.3 The jacket shall be printed with a 1000’ to 0’ marking system and/or 333 meters to 0 meters system.

3.4 Work Area Outlet Solutions Category 6 Modular Jacks

3.4.1 Horizontal UTP Category 6 data cabling to be terminated at the workstation shall be terminated with modular 8 position, 8 wire RJ45 connector. Recommended OEMs include, but are not limited to Panduit, Belden, Commscope or Leviton. Modules are to be wired as per T568B. Modular data jacks shall be blue in color except when used for wireless applications in which case they shall be orange in color.

3.4.2 The approved horizontal UTP Category 6 voice cabling to be terminated at the workstation shall be terminated with modular 8 position, 8 wire RJ45 connector. Recommended OEMs include, but are not limited to Panduit, Belden, Commscope or Leviton. Modules are to be wired as per T568B. Modular voice jacks shall be blue in color.

3.4.3 Modular jacks must meet FCC Part 68 Subpart F; contacts are to be plated with 50 micro inches of gold.

3.4.4 Modular jack contacts shall have a minimum of 2500 plug insertions without degradation of electrical or mechanical performance as per the IEC60603-7 specification.

3.4.5 Jack termination shall utilize a paired termination sequence. Maintain untwist to a maximum of ½ inch during termination. Leave one (1) foot or thirty (30) centimeters of cable slack in the ceiling above each work area outlet location. If the cable is installed in conduit leave one (1) foot or thirty (30) centimeters of cable slack in the closest pull box and or cable tray.

Work Area Patch Cords

3.4.6 Patch cords shall be stranded Category 6 and meet or exceed FCC Part 68 and IEC 60603-7 specifications. The plug shall have contacts plated with 50 micro inches of gold for improved durability and have a minimum of 2500 plug insertions without degradation of electrical or mechanical performance.

3.4.7 The patch cord shall be blue in color and shall be ten (10) feet or three (3) meters in length except when used for wireless applications in which case they shall be orange in color and shall be no more than seven (7) feet or two (2) meters in length.

3.4.8 Patch cords shall be manufacturer assembled and verified. Some of recommended manufacturers are Panduit, Belden, Commscope, and Leviton.

Flush Mounted Faceplates

3.4.9 The horizontal UTP cabling shall be terminated at the workstation on a flush mounted wall plate. Each faceplate shall be 4 or 6 ports on a single gang to allow for future growth. All unused ports will have blank modules installed.

3.4.10 Faceplates shall be UL listed and CSA Certified. Furniture Faceplates

3.4.11 Horizontal UTP cabling terminated at the workstation in systems furniture shall use a four-port faceplate. All unused ports shall be filled in with blank inserts.

3.5 Telecommunications room termination solutions.

Horizontal Data Cable Terminations

3.5.1 All data Cat 6 horizontal UTP cabling shall be terminated on RJ45 modular jacks and connected to modular rack mount patch panels. The modular patch panels shall be mounted in a standard 19” rack. All materials to be supplied by the Contractor to make a complete solution.

3.5.2 Modular patch panels shall be 24 or 48 port modular panels and shall be black in color. RJ45 modular jacks shall be used to connect to modular patch panels.

3.5.3 Leave ten (10) feet and or three (3) meters of slack in the telecommunications room to allow for future rack relocation if required. Do not store the slack in bundled loops. Cable slack should be stored in an extended loop or in figure eight.

Telecom Room Patch Cords

3.5.5 Patch cords shall be stranded Category 6 and meet or exceed FCC Part 68 and IEC 60603-7 specifications. The plug shall have contacts plated with 50 micro inches of gold Product and Installation Specifications For Building Data Communication Cabling 9 for

improved durability and have a minimum of 2500 plug insertions without degradation of electrical or mechanical performance.

3.5.6 Data patch cords shall be blue in color and shall be seven (7) feet and or two (2) meters in length unless otherwise specified.

3.5.7 Approved patch cords shall be manufacturer assembled, tested and verified. Some of recommended manufacturers are Panduit, Belden, Commscope or Leviton.

Fiber Optic Backbone Cabling – Singlemode & Multimode

3.5.9 Sedgwick County utilizes singlemode fiber between buildings, and OM3 multimode fiber between Telecommunications Rooms within a single building. The approved inter-building singlemode fiber optic backbone cables shall be 9/125um OS2 and constructed with Corning optical fiber. The approved intra-building multimode fiber optic cables shall be 50/125um OM3. Indoor cables shall be tight buffered with CMP (FT6) or CMR (FT4) where applicable. If needed, outdoor cables shall be loose tube CMR (FT4) outdoor rated fiber optic cable. Recommended manufacturers are Panduit, Belden, Commscope, Corning, and Leviton.

3.5.10 The approved inter-building singlemode fiber optic backbone cables from the Building Entrance Facility (BEF) to the Telecommunications Room (TR) shall be a minimum twelve-strand (12-strand) cable unless otherwise specified by Sedgwick County. The approved intra-building multimode fiber optic cables that run between Telecommunications Rooms (TRs) shall be a minimum of twelve-strand (12-strand) cable unless otherwise specified by Sedgwick County

3.5.11 Cable to be formed into groups of 12 fibers. Groups and individual fibers shall be identified in accordance with ANSI/EIA/TIA-598-A

3.5.12 Fiber optic cable groups shall be assembled to form a single compact core and covered by a protective sheath. The sheath shall consist of an overall jacket and one or more layers of dielectric material applied over the core.

Fiber Optic Connectors

3.5.13 The fiber optic connectors must be field installable connectors. The connectors shall be LC style UPC for both inter-building backbone cables and intra-building backbone cables. All connectors are to meet ANSI/EIA/TIA and IEC standards for repeatability.

3.5.14 The connector shall be capable of terminating on either 900 micron tight-buffered cable, 3.0 mm jacketed fibers or 250 micron loose tube fibers. The connector shall also have a zirconia ceramic ferrule for both multimode and singlemode connectors and must have a locking feature to the coupler.

3.5.15 The connector shall provide a strain relief mechanism for installation on a single fiber. The fiber within the body of the connector shall be isolated mechanically from cable tension bending and twisting as per ANSI/TIA-568-C.3.

Fiber Optic Patch Panels

3.5.16 The fiber optic patch panel shall be rack mountable in a 19" rack and black in color. The panels shall comply with ANSI/TIA-568-C.3 (connecting hardware section). Recommended manufacturers include, but are not limited to Panduit, Belden, Commscope, Corning and Leviton.

3.5.17 The fiber optic patch panel shall have a slide out shelf or swing out drawer for access to the fiber terminations, adapter panels for patching.

3.5.18 The fiber optic patch panel shall provide for bend radius control and use a strain relief to accommodate the fiber optic cables.

3.5.19 The fiber optic patch panel shall be capable of terminating tight buffered and loose tube multimode or singlemode fiber optic cables.

Fiber Optic Patch Cords

3.5.20 Dual fiber optic patch cords are to be singlemode 9/125um or OM3 multimode 50/125um. Connector types on ends of patch cords to be determined by Sedgwick County.

3.5.21 Patch cords to be factory assembled and verified. Fiber patch cords shall comply with ANSI/TIA-568-C.3

3.5.22 The color of the singlemode patch cords will be yellow. The color of the multimode patch cords will be aqua. The length of the patch cords will be ten (10) feet or three (3) meters unless otherwise specified. Recommended manufacturers include, but are not limited to, Panduit, Belden, Commscope, Corning and Leviton.

3.6 Rack and Cable Management System

Telecommunication Racks

3.6.1 Telecommunication racks shall be 19", floor mounted, black in color, accommodate a minimum of 45 rack unit space, and have anchor holes in the base. Each rack shall be equipped with one (1) duplex outlet on a dedicated 15 A, 120 V, isolated ground circuit.

Panduit CMR series rack part number 19X84S is an example of a recommended manufacturer.

3.6.2 All telecommunications racks are to be fitted with one (1) black 10 outlet horizontal, rack mount, power strip.

3.6.3 All racks are to be equipped with a Telecommunications rack ground bar, example Panduit TRGB19.

3.6.4 The color of the rack and accessories shall be black.

Vertical Cable Management

3.6.5 A six inch (6") vertical cable manager is to be provided on each side of the 19" inch rack, except where racks are ganged together. Panduit patch runner PRVF6 (vertical manager), PRD6 (door) or equivalents shall be used.

3.6.6 Where racks are ganged together utilize an eight inch (8") PRVF8 (vertical manager), PRD8 (door) or equivalents between the racks. Depending on the number of horizontal drops where racks are ganged together the twelve inch (12") PRVF12 (vertical manager), PRD12 (door) or equivalent shall be used.

3.6.7 The vertical cable manager shall have a metal door that hinges open from the right or left.

3.6.8 The vertical cable manager shall have bend radius control built into the manager so as patch cables transition into the manager they are not resting on a sharp edge.

Horizontal Cable Management

3.6.9 One (1) horizontal cable manager per copper patch panel is to be provided. Managers are to be 1U for 24 port patch panel or 2U for 48 port patch panel. The exact layout of cable management per patch panel should be based on the rack layout template in Appendix A.

3.6.10 The horizontal cable manager door shall hinge up or down, must have bend radius control built into the slots for patching and transitioning into the vertical managers and must have retaining clips.

3.6.11 The color of the horizontal cable manager shall be black. Panduit PatchLink series, WMPFSE, WMPHF2E is an example of an acceptable product.

3.7 Raceway Solutions

3.7.1 All single channel or multi-channel Raceway solutions and accessories installed shall be Panduit, Wiremold, or equivalent.

3.7.2 All Raceway shall be installed to the recommended practices of the manufacturer and all applicable electrical codes. All accessories shall have bend radius control built in for communications cabling as per the ANSI/EIA/TIA 569 –A standard.

3.8 Grounding and Bonding

3.8.1 The grounding and bonding of the telecommunications system shall meet all local, provincial and national codes and bylaws.

3.8.2 All grounding and bonding shall be installed as per ANSI/EIA/TIA 607(A)

3.8.3 A separate ground should be established for the telecommunications system. Where this is not possible the telecommunications system ground shall be tied into the building/electrical ground.

3.8.4 A communications ground that is continuous and permanent through all telecommunication rooms must be established.

3.8.5 All racks and cabinets must be grounded to the telecommunications grounding system using 6 AWG green insulated stranded copper ground wire. All racks are to be equipped with Panduit TRGB19 telecommunications rack ground bars or equivalent.

3.9 Miscellaneous

Test Equipment

3.9.1 The cabling contractor is to use the Fluke DTX series scanner or equivalent with the latest version of firmware to test the UTP cabling system. All optical fiber shall be tested with a light source meter. (Details in the testing section of this document.)

Spiral Wrap

3.9.2 Cables running from system furniture feed points to the system furniture shall be neatly wrapped with Panduit T50R-C series spiral wrap and or PW series Pan Wrap or equivalent. Cabling contractor to size the spiral wrap accordingly.

Fire Stopping

3.9.3 The cabling contractor must supply and install all required fire stopping materials to reestablish the integrity of any and all fire-rated architectural structures and assemblies they have worked on. Mechanical systems consisting of standard conduit, sleeves, cored

holes and all horizontal and backbone pathways that penetrate fire-rated barriers shall be fire stopped. The cabling contractor must install an approved fire-stop material recommended by CSA, ULC or UL in accordance with all applicable codes. Intumescent putties and or cementitious materials with a minimum three (3) hour rating shall be used.

4. INSTALLATION

The approved contractors that have been chosen to participate in this bid shall be a certified installer. The contractor shall have a minimum of five (5) years industry experience and have been trained in the proper installation practices as per ANSI/TIA-568-C. All contractors shall have manufacturer trained technicians with a minimum of two (2) years installation experience.

4.1 General Conditions

4.1.1 The approved cables and components must be installed and terminated in accordance with the ANSI/TIA-568-C standard. Particular attention must be given to maintaining the integrity of the pair twists, bend radius and ensuring proper distance is kept from fluorescent light fixtures, electrical cables or any other source of EMI.

4.1.2 Leave ten (10) feet and or three (3) meters of slack in the telecommunications room to allow for future rack relocation if required. Do not store the slack in bundled loops. Store cable slack in an extended loop or a figure eight. Leave one (1) foot of cable slack in the ceiling above each work area outlet location.

4.1.3 The maximum horizontal cable length is not to exceed 90 meters or 295 feet. If the 90 meters or 295 feet constraint cannot be met, the cabling contractor is to notify Sedgwick County.

4.1.4 All plywood backboard(s) are to be supplied and installed by the contractor unless otherwise noted. All plywood backboards shall be fire retardant.

4.1.5 All cables and pathways such as conduits, cable tray or other systems used for communication cable distribution to be run parallel or perpendicular to building lines.

4.1.6 To minimize any possibilities of disruption, maintain the minimum clearances from electrical and heat sources when routing cables.

4.1.7 Any deviation from the cable routing, outlet and equipment locations shown on drawings must be approved by the consultant and documented on as-built drawings.

4.1.8 Avoid scraping, denting, or otherwise damaging cables, before, during or after installation. The cabling contractor, without any additional compensation, shall replace damaged cables.

4.1.9 Bush, ream and remove any sharp projections on all conduits prior to installation of communications cables.

4.2 Horizontal Cable Distribution

4.2.1 The cabling contractor is to supply Panduit Tak-Ty cable ties or equivalent and any other miscellaneous hardware required to support horizontal cabling where conduit or cable tray has not been provided.

4.2.2 Pull all cables in a continuous run. No cable splices will be permitted.

4.2.3 Leave one (1) foot or thirty (30) centimeters of cable slack in the ceiling above each work area outlet location. If the cable is installed in conduit leave one (1) foot or thirty (30) centimeters of cable slack in the closest pull box and or cable tray.

4.2.4 When bundling cables, comply with manufacturer's recommended bundling practices for installation. Ensure that excess pressure is not placed on the cable at any point that may result in the compression or deformation of the cable jacket and internal pair/conductor geometry.

4.2.5 Provide blank filler plates for all unused modular jack positions on faceplates.

4.3 Horizontal Cabling

4.3.1 Supply and install horizontal cabling as detailed on communications cabling layout drawings.

4.3.2 A Typical station cable drop consists of two (2) horizontal data cables. Unless otherwise noted on the drawings and/or otherwise specified, each station cable drop shall have a minimum of two (2) cables.

4.3.3 All horizontal data and voice cabling will originate from the telecommunication room out to the designated workstation location in a star topology.

4.4 Rack and Cable Management System

4.4.1 All 19" racks and brackets are to be located as shown on communications cabling layout drawings.

4.4.2 All racks are to be anchored securely to the floor.

4.4.3 All racks, patch panels, cabinets, metal raceways and data equipment are to be grounded to building ground bus bars using Panduit Network Grounding Systems product or equivalent.

4.5 Fire Stopping

4.5.1 Fire stopping requirements must include prevention of fire from passing through a barrier. These seals are required to maintain safety and security within the clients' premises.

4.5.2 The cabling contractor must re-establish the integrity of any and all fire-rated architectural structures and assembles they have worked on.

4.6 Labeling

4.6.1 All labels shall be Panduit Identification or equivalent Products for voice and data structure cabling systems.

4.6.2 Cable labels shall be of self-laminating vinyl construction with a white printing area and a clear tail that self laminates the printed area when wrapped around a cable. The clear area should be of sufficient length to wrap around the cable at least one and one-half times and be installed within 2" of the termination point of the cable, patch cord or pigtail.

4.6.3 All adhesive cable labels shall meet the legibility, defacement, and adhesion requirements specified in UL 969 (Ref. D-16). In addition the labels shall meet the general exposure requirements in UL 969 for indoor use.

4.6.4 All cable labels shall be compliant with the TIA/EIA-606(A) Section 6.2.2 Cable Labeling, Section 6.2.4 Termination Hardware Labeling, and Section 6.2.6 Termination Position Labeling.

4.6.5 All patch panel and BIX/110 block labels are to be mechanically printed and are to follow the guidelines in CSA-T528-93 for Color Coding of Termination Fields.

4.6.6 Label all cabling in accordance with CSA-528 specifications. One label should be attached to the front of the workstation faceplate, one to the front of the patch panel, and one at each end of the cable.

4.6.7 All labels must be mechanically printed. Hand written labels are not permitted.

4.6.8 All intra-building and inter-building backbone cables for voice and data shall be labeled. Labeling shall include destination (building) to and from at each end.

4.6.9
The horizontal cables shall be labeled in the format of **FS-AN**, where:

F is the numeric character(s) identifying the floor of the building occupied by the telecommunications space (TS);
S is the alpha character(s) uniquely identifying the TS on floor F, or the building area in which the space is located;

A is either one or two characters uniquely identifying a single patch panel, a group of patch panels with sequentially numbered ports, an IDC connector, or a group of IDC connectors, serving as part of the horizontal crossconnect;
N is two to four numeric characters designating the port on the patch panel, or the section of an IDC connector on which a four-pair horizontal cable is terminated in the TS.

Example:

1A-B24

F = 1
S = A
A = B
N = 24

Port 24 in patch panel B in closet A on the first floor

4.7 Testing

4.7.1 The cabling contractor is to use the Fluke DTX series or equivalent with the latest version of firmware to test the UTP cabling system. A light source and power meter will be used to for all fiber optic cables. The cabling contractor must ensure that all cabling is tested in accordance to the proposed specifications of the category installed.

4.7.2 Upon completion of testing by the cabling contractor, a Sedgwick County representative may choose to witness up to 10% of the cables being tested.

4.7.3 All deficiencies must be corrected before the Project Manager will provide a certificate to release the holdback on the project.

4.7.4 Category 6 field test parameters shall be. Testing of all 4 pairs is to include but not be limited to the following:

1) Wire Map
2) Insertion Loss
3) Equal Level Far End Cross Talk (ELFEXT)
4) Power sum equal level far end cross talk (PSELFEXT)
5) Delay Skew
6) Power sum attenuation to crosstalk ratio (PSACR)
7) Near end cross talk (NEXT)
8) Propagation Delay
9) Cable length
10) Power sum near end cross talk (PSNEXT)
11) Return Loss

4.7.5 A tester with the most recent version of its software and firmware must perform all tests in accordance to ANSI/EIA/TIA TSB-67. The nominal velocity of propagation (NVP) must be set specific to each cable manufacturer before testing. Portable testers to be calibrated on a minimum annual basis. Fluke DTX or equivalent shall be used.

4.7.6 Test patch cords for the tester must be designed and approved for testing by the manufacturer. Field assembled patch cords are not acceptable.

4.7.7 Test each strand of fiber with a Power Meter / Light Source combination operating at wavelengths of 850 nm and 1300 nm for multimode fibers and 1310 nm and 1550 nm for single mode fibers. Perform these tests in both directions. These tests shall be completed after cable installation, splicing and connectors are installed. Provide test results in soft copy to the Sedgwick County representative for the project.

4.7.8 All cable faults must be corrected. Splicing of any cables will not be permitted, for any reason, unless prior authorization is received in writing by Sedgwick County.

5. DOCUMENTATION

5.1 “As built” drawings

The cabling contractor is required to provide as-built drawings of the cable installation. This shall include the pathway of the cables from the telecommunications rooms to the workstation. The as-built drawings shall also include all additional cabling installed during the project. The cabling contractor shall provide the as-built drawings to Sedgwick County within 7 business days of the completion of the project.

5.2 Cable test results

The cabling contractor shall provide all test results in hard and soft copy to Sedgwick County. The electronically supplied test results shall be in the proper tester format. Test results shall include all voice and data horizontal cables and all voice and data backbone cables. The hard copy report shall indicate for each cable, when it was tested successfully and the signature of the technician that performed the test. The entire report must be signed by an authorized person for the cabling contractor at the end of the project.

5.3 Cabling Contract Certification

The cabling contractor shall provide certification with all mentioned documentation mentioned above. Certification requirements are documentation that a Building Industry Consulting Services International (Bicsi) Certified installer 2 is on staff

6. WARRANTY

The cabling contractor must provide the owner with a 20 year product warranty and a minimum one (1) year labor warranty.

7. COMPLETE SOLUTION

A complete solution consists of jacks, cabling, patch panels, labeling, testing and warranty supplied by Contractor and Manufacture.

Appendix A: Network Rack Layout Example

Information on vertical cable management can be found starting in section 3.6.5. The vertical cable management should be self-explanatory. Information for horizontal cable management can be found starting in section 3.6.9. The image on the next page is an example rack layout template – it is not an exact rack layout for any particular project and should not be treated as such. It is merely a guide for quantity, size, and placement of vertical cable management. An exact layout for a particular project can be provided by Sedgwick County Networking to the cabling contractor upon request.

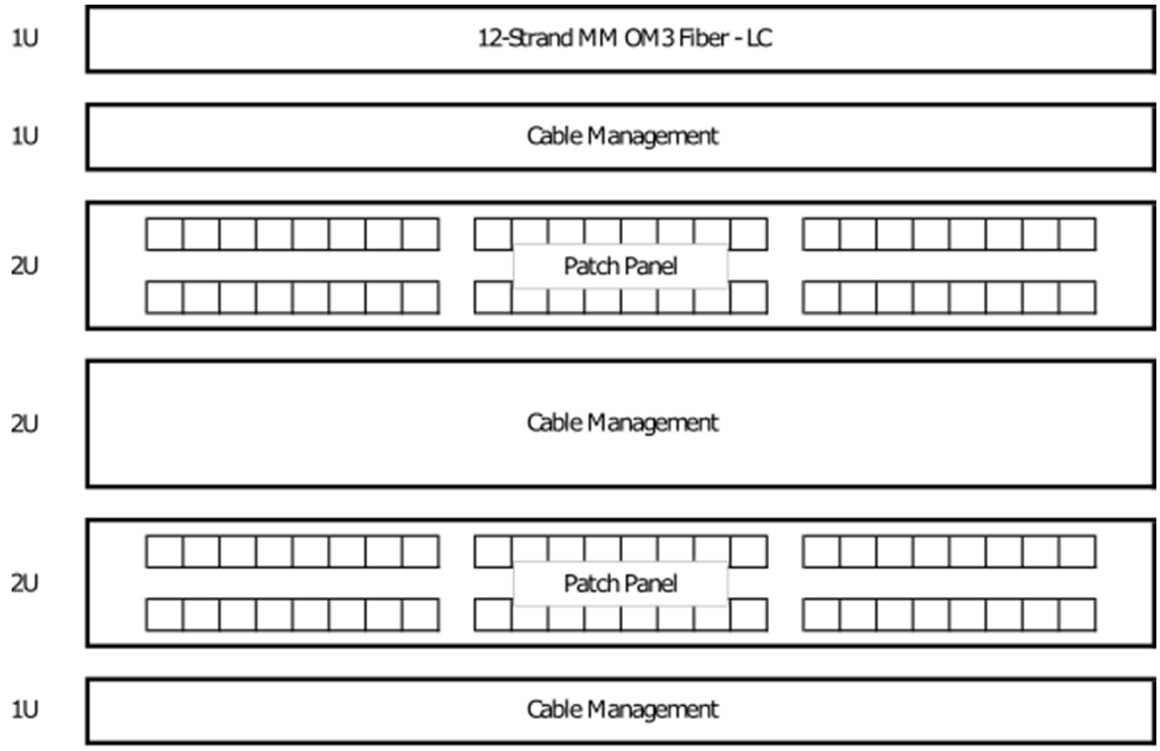
1U
12-Strand MM OM3 Fiber - LC
1U
Cable Management
2U
Patch Panel
2U
Cable Management
2U
Patch Panel
1U
Cable Management

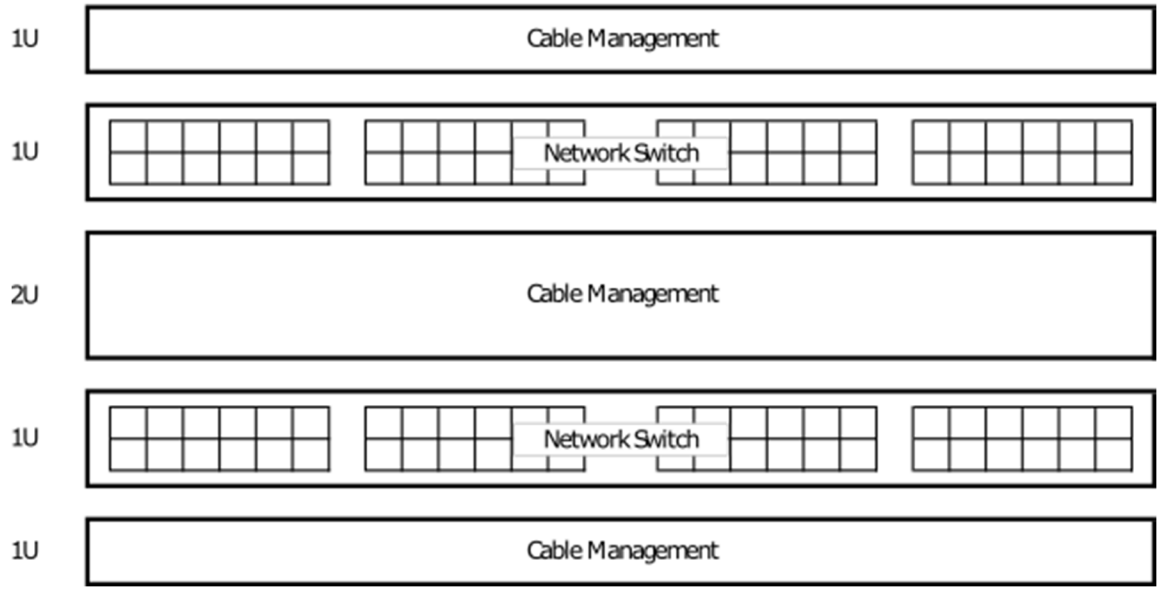
1U
Cable Management
1U
Network Switch
2U
Cable Management
1U
Network Switch
1U
Cable Management